PRODUCT SHEET

Description:
Shoe Boy, 3 Opening, White PS, Left Hand, No Fittings

Item number:
22.07.231-0

Units	Box	Carton	HS Code	Barcode
Pcs.	1	100	3926300090	5704866081856

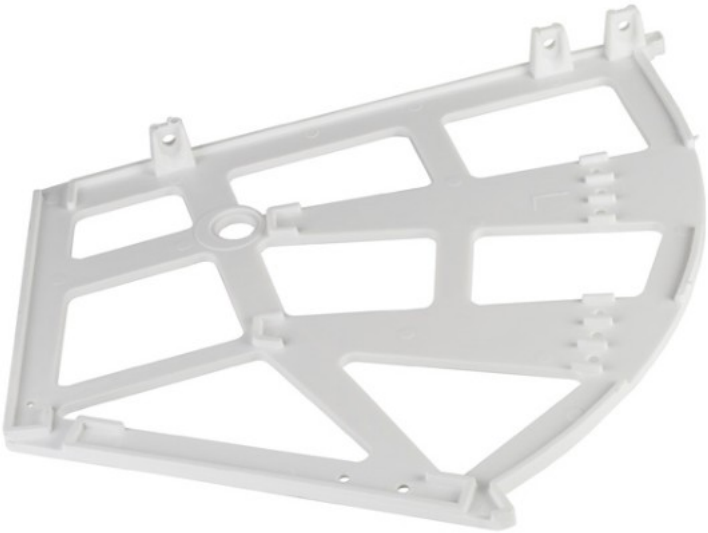

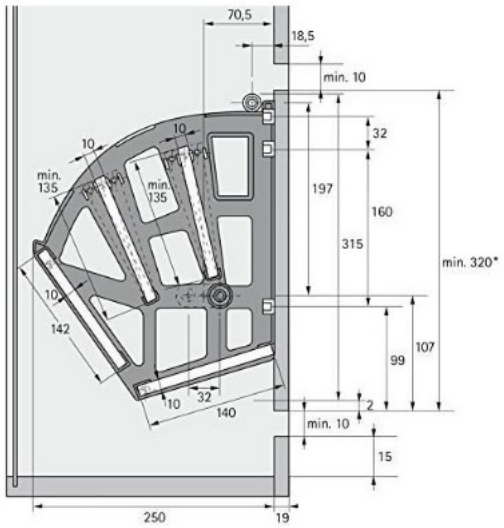

SISO A/S
Mileparken 11
DK-2740 Skovlunde
Denmark
VAT: DK 24786013

Phone +45 45 830 900

www.siso.dk
siso@siso.dk

Danske Bank
Nytorv Branch
Copenhagen
SWIFT: DABADKKK

Account no.
4180 3112 112936
IBAN Account
DK7230003112112936