PRODUCT SHEET

Description:
Panel Support Leg 118-155mm, F/10-18mm Panel, SS304, For Toilet Cubicles, Incl. Black Plastic Washers F/10, 13 & 16mm, Panel Thickness. 2 X 2mm,1 X 3mm & 2 X 4mm

Item number:
22.23.145-1

Units	Box	Carton	HS Code	Barcode
Pcs.	4	40	8302419000	5704866460262

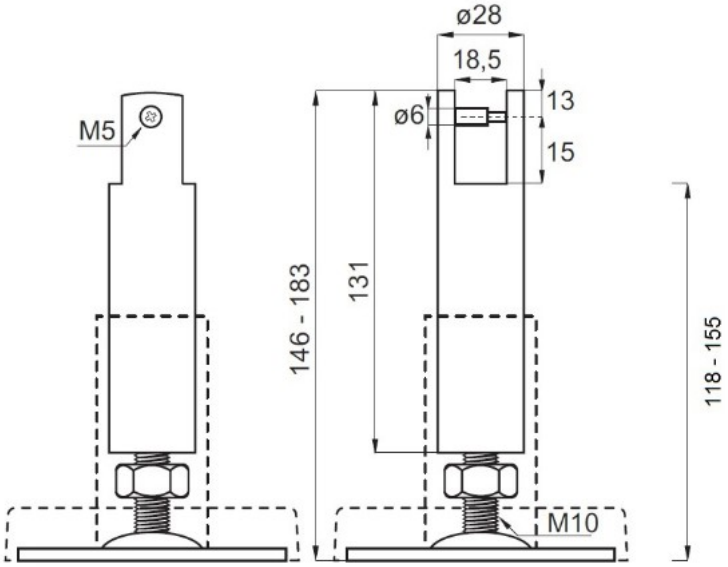

SISO A/S
Mileparken 11
DK-2740 Skovlunde
Denmark
VAT: DK 24786013

Phone +45 45 830 900

www.siso.dk
siso@siso.dk

Danske Bank
Nytorv Branch
Copenhagen
SWIFT: DABADKKK

Account no.
4180 3112 112936
IBAN Account
DK7230003112112936