PRODUCT SHEET

Description:
Glass Clamp "Kos", SS-Look, Floor/Glass, 55x50x30mm, 6-10mm, Glass Thickness, No Cutting, Brass Material

Item number:
15.23.780-5

Units	Box	Carton	HS Code	Barcode
Pcs.	1	50	8302419000	5704866512855

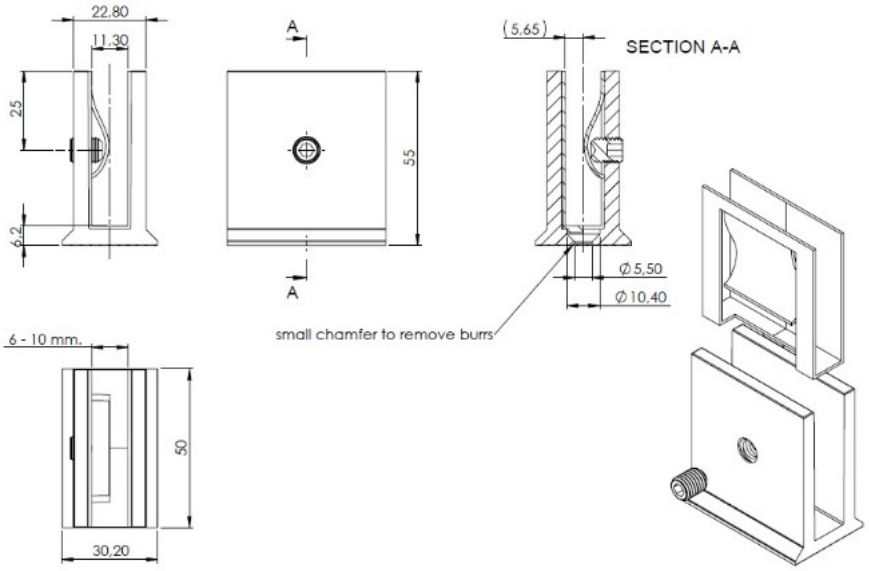

SISO A/S
Mileparken 11
DK-2740 Skovlunde
Denmark
VAT: DK 24786013

Phone +45 45 830 900

www.siso.dk
siso@siso.dk

Danske Bank
Nytorv Branch
Copenhagen
SWIFT: DABADKKK

Account no.
4180 3112 112936
IBAN Account
DK7230003112112936