PRODUCT SHEET

Description:
Round Mounting Bracket, Steel, NPL, F/15.11.439/440/441/442 Incl. 3 Wood Screws

Item number:
15.11.454-0

Units	Box	Carton	HS Code	Barcode
Pcs.	1	1300	8302420090	5704866057547

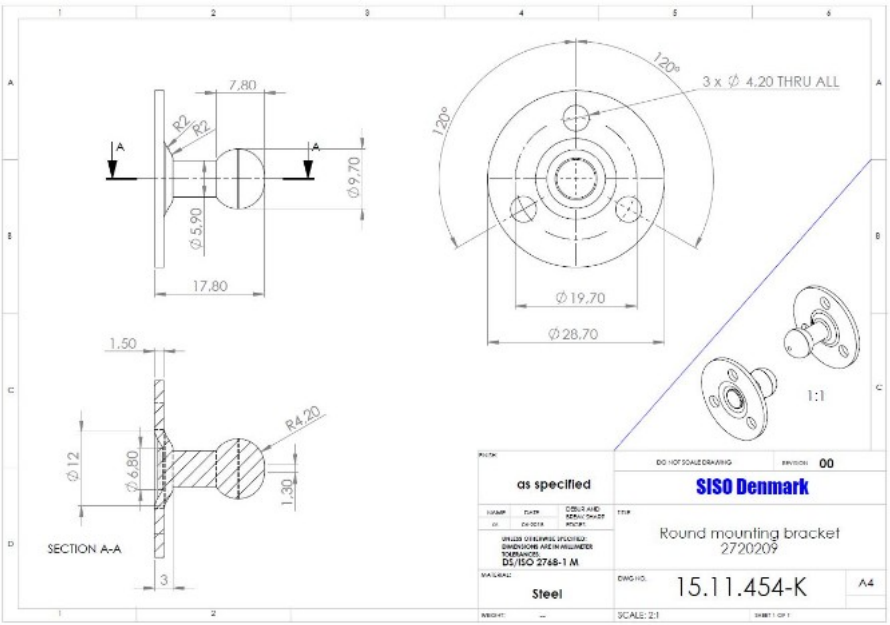

SISO A/S
Mileparken 11
DK-2740 Skovlunde
Denmark
VAT: DK 24786013

Phone +45 45 830 900

www.siso.dk
siso@siso.dk

Danske Bank
Nytorv Branch
Copenhagen
SWIFT: DABADKKK

Account no.
4180 3112 112936
IBAN Account
DK7230003112112936