PRODUCT SHEET

Description:
Expansion Spring 413mm, 16 KG, Steel, CP, W/SISO Logo

Item number:
15.11.410-1

Units	Box	Carton	HS Code	Barcode
Pcs.	1	50	7320208190	5704866502597

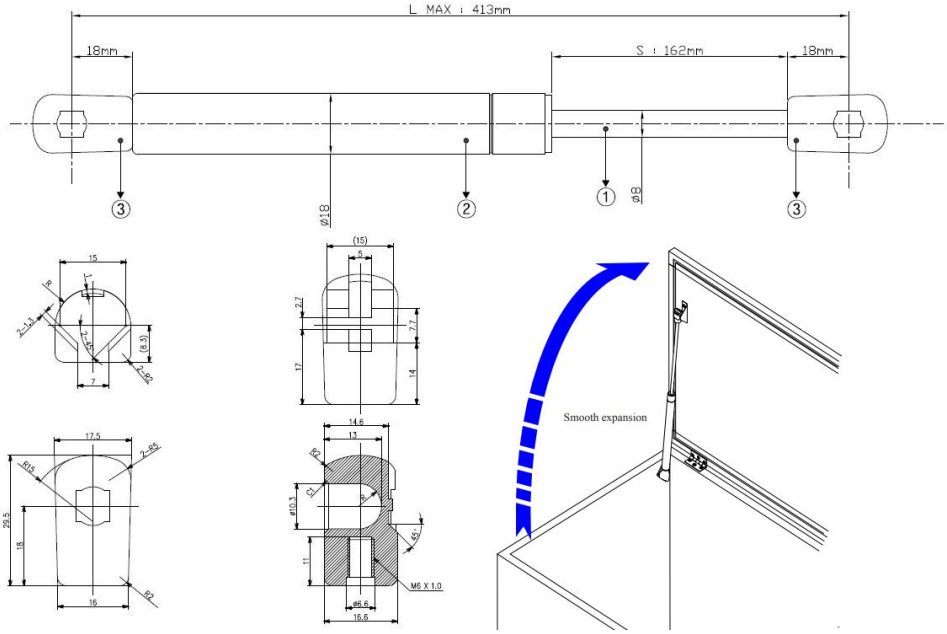

SISO A/S
Mileparken 11
DK-2740 Skovlunde
Denmark
VAT: DK 24786013

Phone +45 45 830 900

www.siso.dk
siso@siso.dk

Danske Bank
Nytorv Branch
Copenhagen
SWIFT: DABADKKK

Account no.
4180 3112 112936
IBAN Account
DK7230003112112936