PRODUCT SHEET

Description:
Glass Door Lock X-689, CK SISO, Matt Nickel Pl, 4-6mm Glass

Item number:
14.09.131-1

Units	Box	Carton	HS Code	Barcode
Pcs.	15	150	8301300000	5704866046213

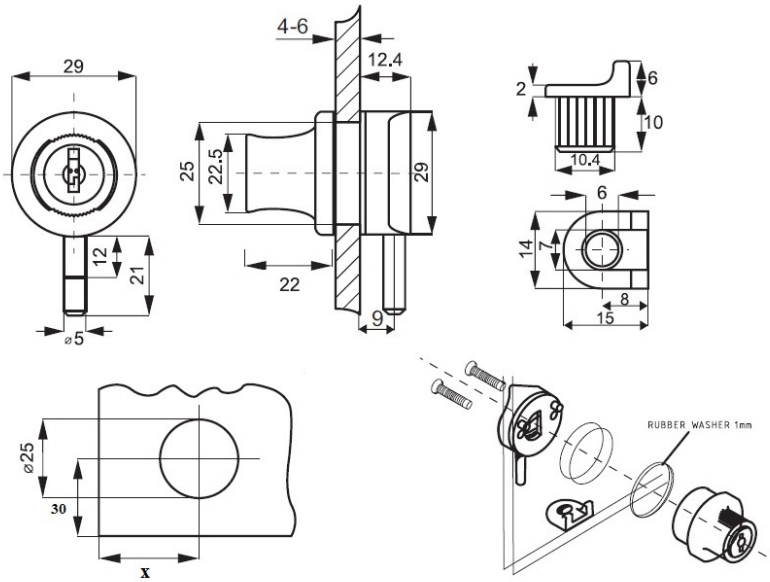

SISO A/S
Mileparken 11
DK-2740 Skovlunde
Denmark
VAT: DK 24786013

Phone +45 45 830 900

www.siso.dk
siso@siso.dk

Danske Bank
Nytorv Branch
Copenhagen
SWIFT: DABADKKK

Account no.
4180 3112 112936
IBAN Account
DK7230003112112936