PRODUCT SHEET

Description:
Combi. Cam Lock M268,Zamak Black,4-Digit,RH,"Public/Private" Setting but Switch Button, 90DG, Master Key & Decoding, Function, Zamak Housing & Cylinder, W/Hex Nut, Washer,, Clips & Straight Cam Pl. CE: 44,7mm, Master Key System D005,, F/1mm Metal Panel thickness, Vertical Installation.

Item number:
14.08.262-0

Units	Box	Carton	HS Code	Barcode
Pcs.	25	50	8301300000	5704866469630

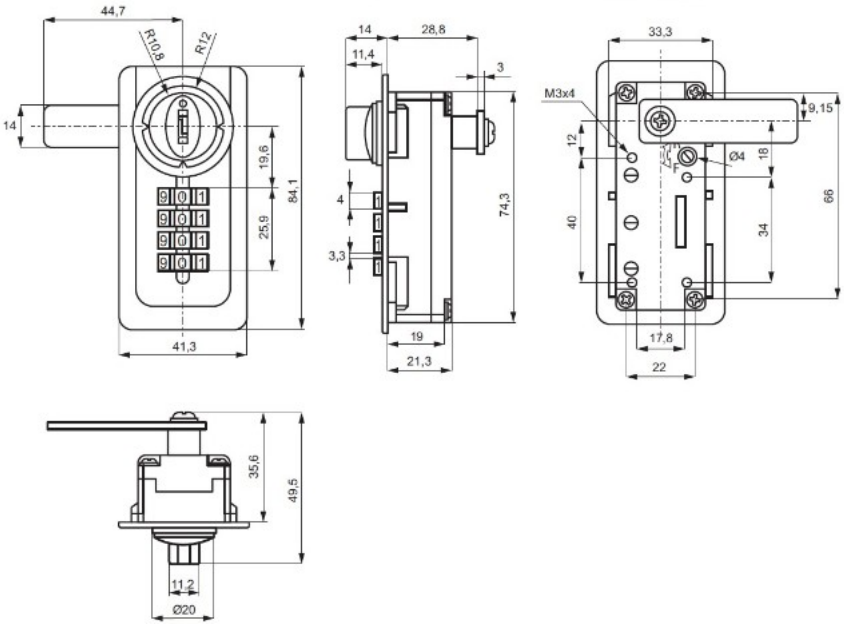

SISO A/S
Mileparken 11
DK-2740 Skovlunde
Denmark
VAT: DK 24786013

Phone +45 45 830 900

www.siso.dk
siso@siso.dk

Danske Bank
Nytorv Branch
Copenhagen
SWIFT: DABADKKK

Account no.
4180 3112 112936
IBAN Account
DK7230003112112936