PRODUCT SHEET

Description:
Sliding Door SISO-70CFP, 3000mm, AL, Ceiling Mount, W/Soft Close, Alu Anodized, 8-10mm Glass Thickness, Max 70KG,, F/Ceiling Mount with Fixed Side Panel, Double Soft Brake

Item number:
28.29.510-7

Units	Box	Carton	HS Code	Barcode
Set	1	10	8302415000	5704866487665

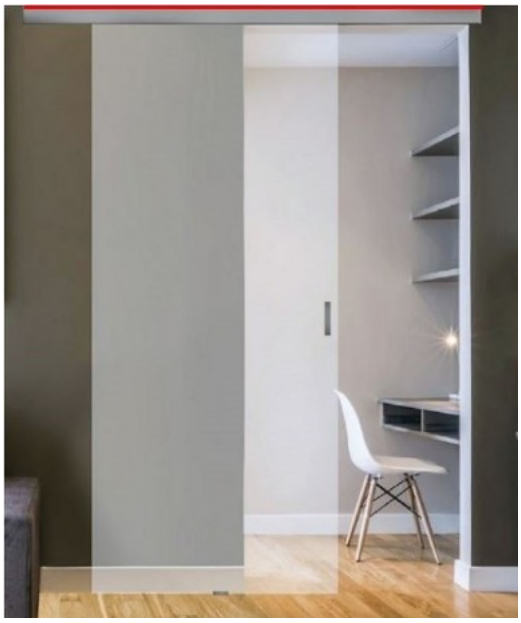

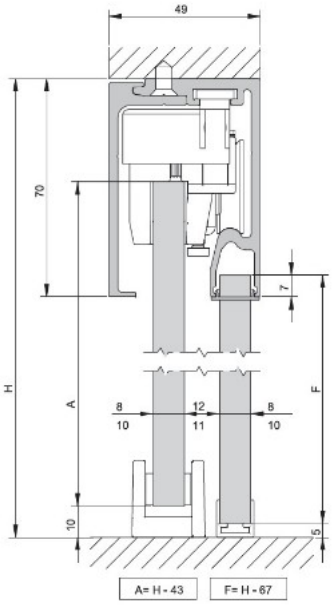

SISO A/S
Mileparken 11
DK-2740 Skovlunde
Denmark
VAT: DK 24786013

Phone +45 45 830 900

www.siso.dk
siso@siso.dk

Danske Bank
Nytorv Branch
Copenhagen
SWIFT: DABADKKK

Account no.
4180 3112 112936
IBAN Account
DK7230003112112936