PRODUCT SHEET

Description:
Drawer Slide NJ4500, 800mm Full Extension, Zinc Plated, Load Capacity 35kg.

Item number:
16.13.290-0

Units	Box	Carton	HS Code	Barcode
Pair			8302420090	5704866515504

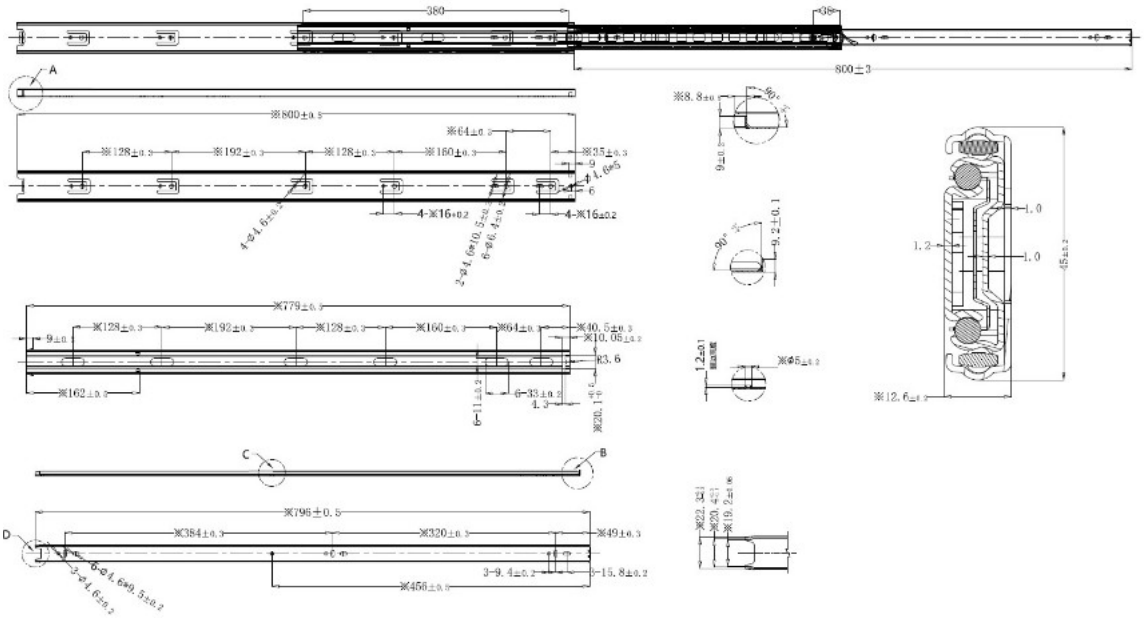

SISO A/S
Mileparken 11
DK-2740 Skovlunde
Denmark
VAT: DK 24786013

Phone +45 45 830 900

www.siso.dk
siso@siso.dk

Danske Bank
Nytorv Branch
Copenhagen
SWIFT: DABADKKK

Account no.
4180 3112 112936
IBAN Account
DK7230003112112936