# PRODUCT SHEET

**Description:**
Cover Plates "Robin",W/Handle Hole, Left, Black Finish

**Item number:**
14.60.658-9

| Units | Box | Carton | HS Code | Barcode |
|---|---|---|---|---|
| Set | 1 | 20 | 8301600090 | 5704866513180 |

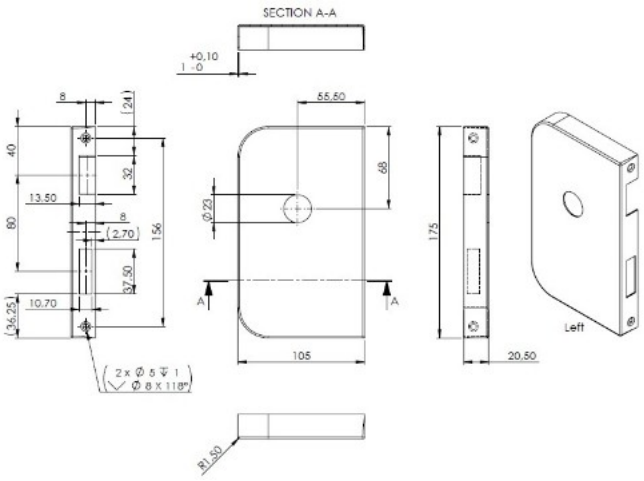


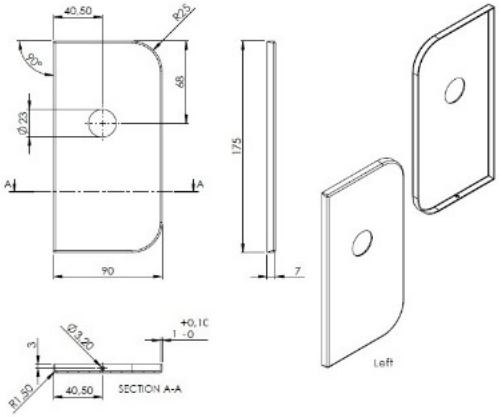


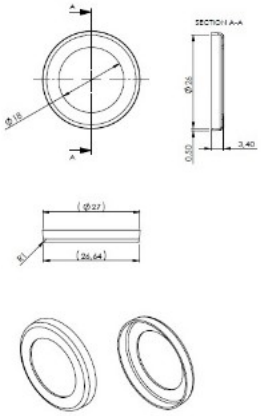

**SISO A/S**
Mileparken 11
DK-2740 Skovlunde
Denmark
VAT: DK 24786013

Phone +45 45 830 900

www.siso.dk
siso@siso.dk

Danske Bank
Nytorv Branch
Copenhagen
SWIFT: DABADKKK

Account no.
4180 3112 112936
IBAN Account
DK7230003112112936