PRODUCT SHEET

Description:
Cover Plates "Robin",W/Handle & Cylinder Hole, Left, SS-304 Brushed

Item number:
14.60.658-5

Units	Box	Carton	HS Code	Barcode
Set	1	20	8301600090	5704866487528

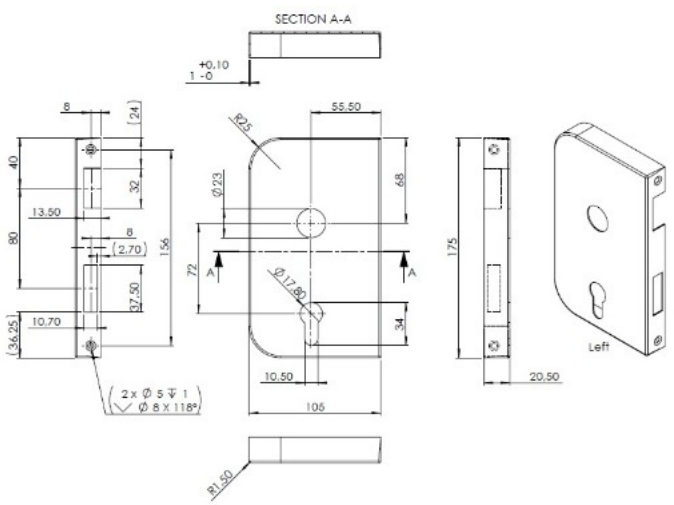

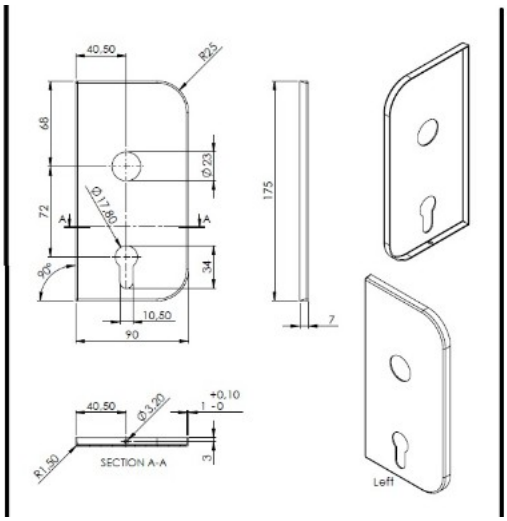

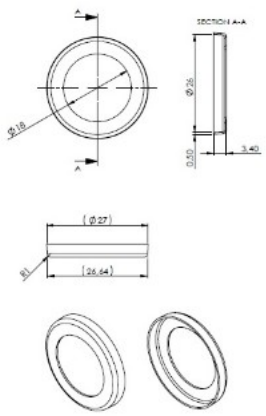

SISO A/S
Mileparken 11
DK-2740 Skovlunde
Denmark
VAT: DK 24786013

Phone +45 45 830 900

www.siso.dk
siso@siso.dk

Danske Bank
Nytorv Branch
Copenhagen
SWIFT: DABADKKK

Account no.
4180 3112 112936
IBAN Account
DK7230003112112936