PRODUCT SHEET

Description:
Elec. Combi. Cam Lock, "Marc II M1", Public/Private, Black Body, Incl. Striking Plate & Straight Cam Pl, CE: 47mm, (Battery CR2032 Not Included) - Download User Guide, From www.siso.dk - Master Code can ONLY be changed in LOCKED, Position, Type Default Master Code: 11223344 +OK+OK+OK+New, Master Code x x x x x x x x (8 digits) + OK, Preset in, Public Mode

Item number:
14.60.393-0

Units	Box	Carton	HS Code	Barcode
Pcs.	1	50	8301300000	5704866517249

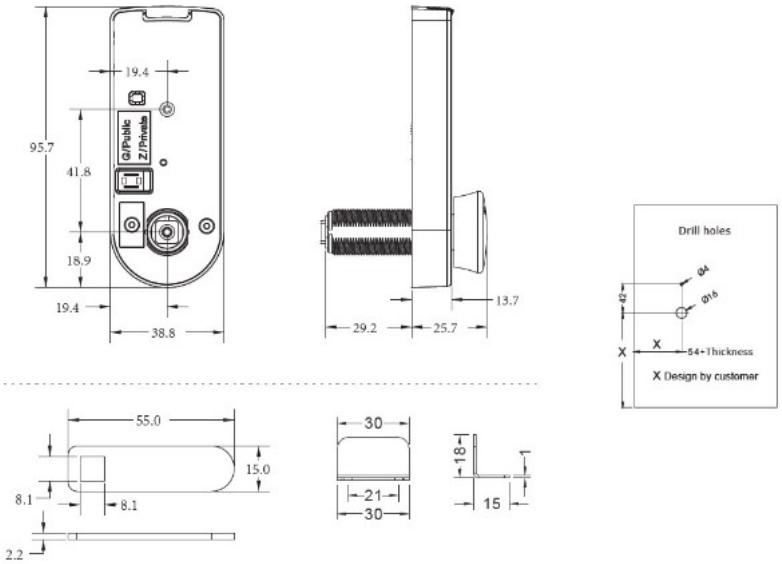

SISO A/S
Mileparken 11
DK-2740 Skovlunde
Denmark
VAT: 24786013

Phone +45 45 830 900

www.siso.dk
siso@siso.dk

Danske Bank
Nytorv Branch
Copenhagen
SWIFT: DABADKKK

Account no.
4180 3112 112936
IBAN Account
DK7230003112112936