PRODUCT SHEET

Description:
Electronic Lock "F-Win" Fingerprint & Bluetooth, Alu Look, F/Patio Doors and Windows, cc:34mm, F/IOS & Android., Included: Adapter F/8mm Spindle & Mounting Screws., 4 Pcs. Batteries AAA-1.5V Are Not Included

Item number:
14.04.607-0

Units	Box	Carton	HS Code	Barcode
Pcs.	1	10	8302415000	5704866502986

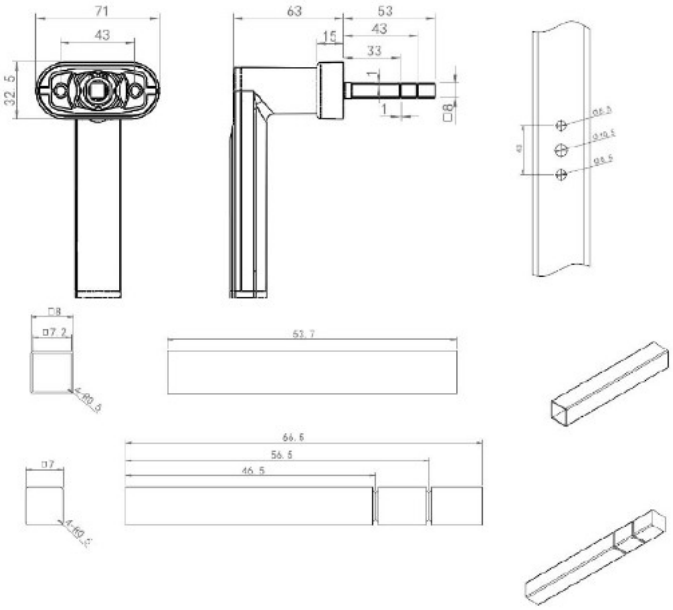

SISO A/S
Mileparken 11
DK-2740 Skovlunde
Denmark
VAT: DK 24786013

Phone +45 45 830 900

www.siso.dk
siso@siso.dk

Danske Bank
Nytorv Branch
Copenhagen
SWIFT: DABADKKK

Account no.
4180 3112 112936
IBAN Account
DK7230003112112936