PRODUCT SHEET

Description:
Fifteen Screw, M6x25mm, Bronze Plated, Conical

Item number:
12.00.900-0

Units	Box	Carton	HS Code	Barcode
Pcs.		2500	7318155898	5704866018531

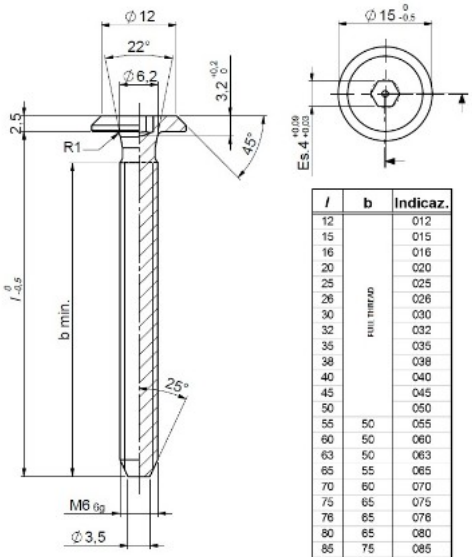

l	b	Indicaz.
12	FULL THREAD	012
15		015
16		016
20		020
25		025
26		026
30		030
32		032
35		035
38		038
40		040
45		045
50		050
55	50	055
60	50	060
63	50	063
65	55	065
70	60	070
75	65	075
76	65	076
80	65	080
85	75	085
90	80	090
95	85	095
100	90	100
102	90	102

SISO A/S
Mileparken 11
DK-2740 Skovlunde
Denmark
VAT: DK 24786013

Phone +45 45 830 900

www.siso.dk
siso@siso.dk

Danske Bank
Nytorv Branch
Copenhagen
SWIFT: DABADKKK

Account no.
4180 3112 112936
IBAN Account
DK7230003112112936